AR-B6003

Intel Atom D525/D425 SBC

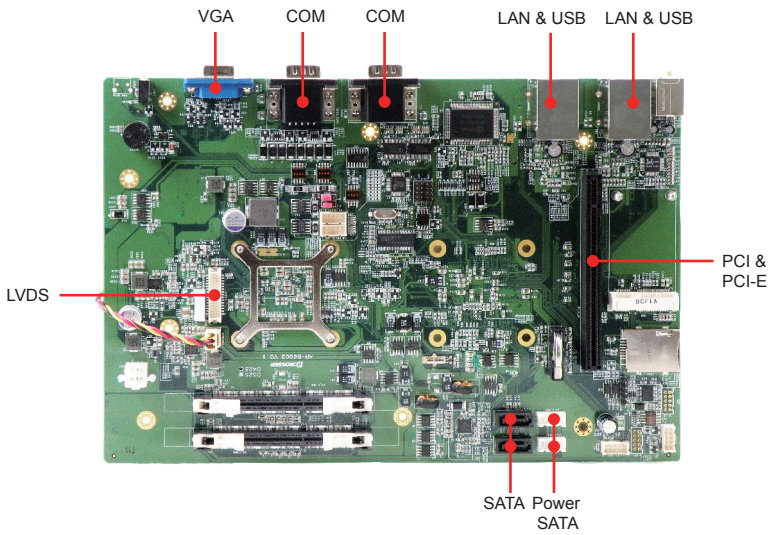

Features

- Support Intel Atom D525 (Dual Core) and D425 (Single Core)
- 2 x DDR3 SO-DIMM, up to 4GB
- Dedicated / selectable PCI & PCI-E x 1 Expansion Slot
- Mini PCIe Expansion Slot
- Use JST connectors and switch to avoid cables drop
- Support Win XP, 7, Fedora 14 and Ubuntu 10

Digital I/O

Watch Dog Timer

Specification

System	
CPU	Intel Atom Dual Cores D525 and Single Core D425
Chipset	Intel ICH8M
Memory	2 x 204-pin SO-DIMM socket support 800MHz DDR3, up to 4GB
BIOS	Phoenix
Hardware Monitoring	CPU voltage and temperature
WatchDog Timer	Software programmable 1~255 sec.
Video	
Graphic Controller	Intel Atom D525/D425 integrated
Video Memory	DVMT 4.0
Video Interface	1 x VGA port (DB15) 1 x 18-bit LVDS (Pin Header)
Storage	
SATA	2 x SATA II port with SATA II power connector
CF	1 x Compact Flash Type I/II slot support UDMA 33
I/O	
Ethernet	2 x GbE RJ45 with LED, Realtek RTL8111DL
AR-RS20	Riser Card (2 x PCI-E x 1 expansion slots)
AR-RS21	Riser Card (1 x PCI + 1 x PCI-E x 1 expansion slots)
miniPCIe	1 x Mini PCIe
Serial Port	3 x RS232 (DB9) 1 x RS232/422/485 (DB9, switch selectable)
USB	6 x USB 2.0 (4 x external port, 2 x JST pin header)
Digital Input	4 x TTL input
Digital Output	4 x 500mA digital output
Audio	Realtek Audio Codec
Power Requirement	
Power Input	12V (+/-5%) single voltage input, 3 poles terminal block
Software	
OS Support	Windows XP, Windows 7, Fedora 14, Ubuntu 10
Mechanical & Environment	
Dimension	262mm x 175mm (10.31" x 6.89")
Operating Temp.	0~60oC (32~140oF)
Storage temp.	-20~80oC (-4~176oF)
Relative Humidity	0 to 90% @ 40oC, non-condensing
Safety	CE, FCC class B

Packing List	
• 1 x AR-B6003	
• 1 x CPU Heatsink and Fan	
• 1 x User manual & Driver CD	
Optional (Purchase Seperately)	
WiFi Module	Mini PCIe card with RF cable and antenna
LVDS	LVDS cable
AR-RS20	Riser Card (2 x PCI-E x 1 expansion slots)
AR-RS21	Riser Card (1 x PCI + 1 x PCI-E x 1 expansion slots)
Ordering Information	
AR-B6003D525	1 x AR-B6003D525
AR-B6003D425	1 x AR-B6003D425
Accessary	ACC-6003 • 1 x USB cable • 1 x SATA cable • 1 x SATA power cable

Dimension

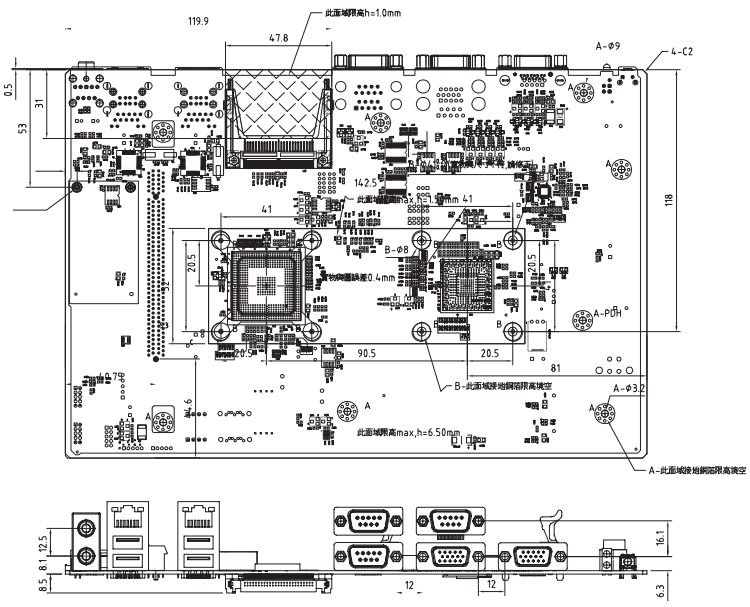

Specifications are subject to change without notice.